Technical Data
Data Sheet N2944, Draft

# SBM012M120GM3A
# 1200V SIC POWER MOSFET

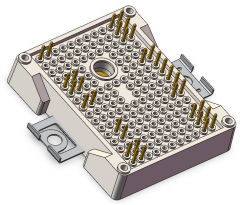

GM

## Features

- Compact and low inductive design
- High frequency SiC MOSFET
- Integrated NTC
- Terminals finish: Ni
- Base isolation: AIN

## Target applications

- Charging Stations
- Power Supply
- Welding & Cutting

## Circuit Diagram

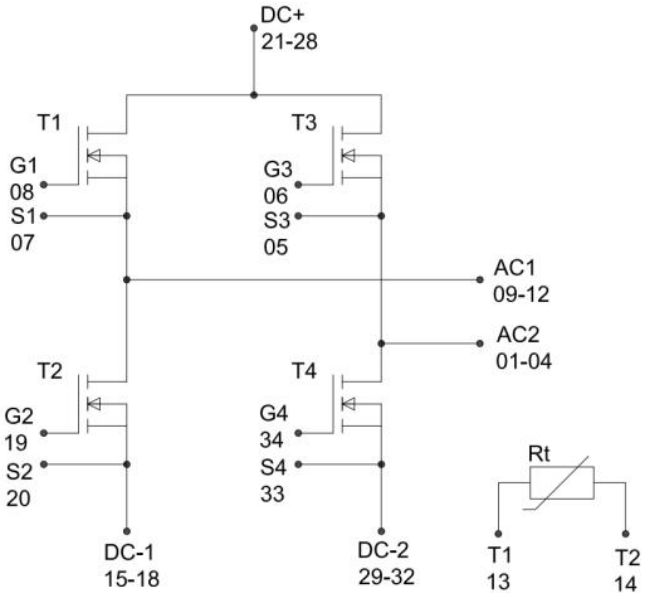

**Technical Data**
**Data Sheet N2944, Draft**

RoHS

## Maximum Ratings@Tj = 25 ˚C, unless otherwise specified

| Parameter | Symbol | Conditions | Value | Unit |
|---|---|---|---|---|
| **H-Bridge Switch - Lo side** | | | | |
| Drain-source voltage | $V_{DSS}$ | - | 1200 | V |
| Drain current | $I_D$ | Tj = Tjmax, Ts = 80˚C | 120 | A |
| Peak drain current | $I_{DM}$ | tp limited by Tjmax | 330 | A |
| Total power dissipation | $P_{tot}$ | Tj = Tjmax, Ts = 80˚C | 158 | W |
| Gate-source voltage | $V_{GSS}$ | - | -4 / 18 | V |
| Maximum Junction Temperature | $T_{jmax}$ | - | 175 | ˚C |
| **H-Bridge Switch - Hi side** | | | | |
| Drain-source voltage | $V_{DSS}$ | | 1200 | V |
| Drain current | $I_D$ | Tj = Tjmax, Ts = 80˚C | 120 | A |
| Peak drain current | $I_{DM}$ | tp limited by Tjmax | 330 | A |
| Total power dissipation | $P_{tot}$ | Tj = Tjmax, Ts = 80˚C | 158 | W |
| Gate-source voltage | $V_{GSS}$ | | -4 / 18 | V |
| Maximum Junction Temperature | $T_{jmax}$ | | 175 | ˚C |
| **Module Properties** | | | | |
| Thermal Properties | | | | |
| Storage temperature | $T_{stg}$ | | -40...+125 | ˚C |
| Operation temperature under switching condition | $T_{jop}$ | | -40...+(Tjmax - 25) | ˚C |
| Isolation Properties | | | | |
| Isolation voltage | $V_{isol}$ | DC Test Voltage* $t_P$ = 2s | 6000 | V |
| Isolation voltage | $V_{isol}$ | AC Voltage $t_P$ = 1min | 2500 | V |
| Creepage distance | | | min. 12.7 | mm |
| Clearance | | | 9.14 | mm |
| Comparative Tracking Index | CTI | | ≥ 600 | |
| Approximate Weight | wt | - | 45 | g |

## Electrical Characteristics

| Parameter | Symbol | Conditions | | | | | Values | | | Unit |
|---|---|---|---|---|---|---|---|---|---|---|
| | | | VGE [V]<br>VGS [V] | VCE [V]<br>VDS [V]<br>VF [V] | IC [A]<br>ID [A]<br>IF [A] | Tj [°C] | Min | Typ | Max | |
| **H-Bridge Switch - Lo side** | | | | | | | | | | |
| **Static** | | | | | | | | | | |
| Drain-source on-state resistance | $r_{DS(on)}$ | | 15 | | 100 | 25<br>125<br>150 | 11.2 | 17<br>18<br>19 | 20.8 | mΩ |
| Drain-source on-state resistance | $r_{DS(on)}$ | | 18 | | 100 | 25<br>125<br>150 | 11.2 | 12<br>17<br>18 | 20.8 | mΩ |
| Gate-source threshold voltage | $V_{GS(th)}$ | | 0 | | 0,04 | 25 | 1.8 | 2.8 | 3.6 | V |
| Gate to Source Leakage Current | $I_{GSS}$ | | 20 | 0 | | 25 | | 10 | 500 | nA |
| Zero Gate Voltage Drain Current | $I_{DSS}$ | | 0 | 0 | 0 | 25 | | 1 | 38 | µA |
| Internal gate resistance | $r_g$ | | | | | | | 1.6 | | Ω |
| Gate charge | $Q_g$ | | -4/18 | 800 | 100 | 25 | | 347 | | nC |
| Short-circuit input capacitance | $C_{iss}$ | f = 100 kHz | 0 | 1000 | 0 | 25 | | 6358 | | pF |
| Short-circuit output capacitance | $C_{oss}$ | | | | | | | 283 | | |
| Reverse transfer capacitance | $C_{rss}$ | | | | | | | 37 | | |
| Diode forward voltage | $V_{SD}$ | | -4 | | 50 | 25 | | 4.0 | | V |
| **Thermal** | | | | | | | | | | |
| Thermal resistance junction to sink* | $R_{th(j-s)}$ | - | | | | | | 0.6 | | K/W |
| *Only valid with pre-applied Vincotech thermal interface material. | | | | | | | | | | |
| **Dynamic** | | | | | | | | | | |
| Turn-on delay time | $t_{d(on)}$ | $R_{gon}$ = 2.5 Ω<br>$R_{goff}$ = 2 Ω | -4/18 | 800 | 100 | 25 | | 21 | | ns |
| Rise time | $t_r$ | | | | | 25 | | 31 | | ns |
| Turn-off delay time | $t_{d(off)}$ | | | | | 25 | | 66 | | ns |
| Fall time | $t_f$ | | | | | 25 | | 14 | | ns |
| Turn-on energy (per pulse) | $E_{on}$ | $R_{G(ext)}$ = 2.5 Ω,<br>L = 99 uH | | | | 25 | | 1312 | | uJ |
| Turn-off energy (per pulse) | $E_{off}$ | | | | | 25 | | 800 | | uJ |

## Electrical Characteristics

| Parameter | Symbol | Conditions | | | | | Values | | | Unit |
|---|---|---|---|---|---|---|---|---|---|---|
| | | | VGE [V]<br>VGS [V] | VCE [V]<br>VDS [V]<br>VF [V] | IC [A]<br>ID [A]<br>IF [A] | Tj [°C] | Min | Typ | Max | |
| **H-Bridge Switch - Hi side** | | | | | | | | | | |
| **Static** | | | | | | | | | | |
| Drain-source on-state resistance | $r_{DS(on)}$ | | 15 | | 100 | 25<br>125<br>150 | 11.2 | 17<br>18<br>19 | 20.8 | mΩ |
| Drain-source on-state resistance | $r_{DS(on)}$ | | 18 | | 100 | 25<br>125<br>150 | 11.2 | 12<br>17<br>18 | 20.8 | mΩ |
| Gate-source threshold voltage | $V_{GS(th)}$ | | 0 | | 0,04 | 25 | 1.8 | 2.8 | 3.6 | V |
| Gate to Source Leakage Current | $I_{GSS}$ | | 20 | 0 | | 25 | | 10 | 500 | nA |
| Zero Gate Voltage Drain Current | $I_{DSS}$ | | 0 | 0 | 0 | 25 | | 1 | 38 | µA |
| Internal gate resistance | $r_g$ | | | | | | | 1.6 | | Ω |
| Gate charge | $Q_g$ | | -4/18 | 800 | 100 | 25 | | 347 | | nC |
| Short-circuit input capacitance | $C_{iss}$ | f = 100 kHz | 0 | 1000 | 0 | 25 | | 6358 | | pF |
| Short-circuit output capacitance | $C_{oss}$ | | | | | | | 283 | | |
| Reverse transfer capacitance | $C_{rss}$ | | | | | | | 37 | | |
| Diode forward voltage | $V_{SD}$ | | -4 | | 50 | 25 | | 4.0 | | V |
| **Thermal** | | | | | | | | | | |
| Thermal resistance junction to sink* | $R_{th(j-s)}$ | - | | | | | | 0.6 | | K/W |
| *Only valid with pre-applied Vincotech thermal interface material. | | | | | | | | | | |
| **Dynamic** | | | | | | | | | | |
| Turn-on delay time | $t_{d(on)}$ | $R_{gon}$ = 2.5 Ω<br>$R_{goff}$ = 2 Ω | -4/18 | 800 | 100 | 25 | | 21 | | ns |
| Rise time | $t_r$ | | | | | 25 | | 31 | | ns |
| Turn-off delay time | $t_{d(off)}$ | | | | | 25 | | 66 | | ns |
| Fall time | $t_f$ | | | | | 25 | | 14 | | ns |
| Turn-on energy (per pulse) | $E_{on}$ | $R_{G(ext)}$ = 2.5 Ω,<br>L = 99 uH | | | | 25 | | 1312 | | uJ |
| Turn-off energy (per pulse) | $E_{off}$ | | | | | 25 | | 800 | | uJ |

Technical Data
Data Sheet N2944, Draft

## Electrical Characteristics

| Parameter | Symbol | Conditions | | | | | Values | | | Unit |
|---|---|---|---|---|---|---|---|---|---|---|
| | | | VGE [V]<br>VGS [V] | VCE [V]<br>VDS [V]<br>VF [V] | IC [A]<br>ID [A]<br>IF [A] | TJ [°C] | Min | Typ | Max | |
| **Thermistor** | | | | | | | | | | |
| **Static** | | | | | | | | | | |
| Rated resistance | R | | | | | 25 | | 5 | | kΩ |
| Deviation of R100 | ΔR/R | R100 =493Ω | | | | 100 | -5 | | 5 | % |
| Power dissipation | P | | | | | | | 245 | | mW |
| Power dissipation constant | d | | | | | 25 | | 1,4 | | mW/K |
| B-value | $B_{(25/50)}$ | Tol. ±2 % | | | | | | 3375 | | K |
| B-value | $B_{(25/100)}$ | Tol. ±2 % | | | | | | 3437 | | K |
| Thermistor Reference KG3B-35 | | | | | | | | | | |

## Ordering Information

| Device | Package | Shipping |
|---|---|---|
| SBM012M120GM3A | GM | 12pcs /box |

## Marking Diagram

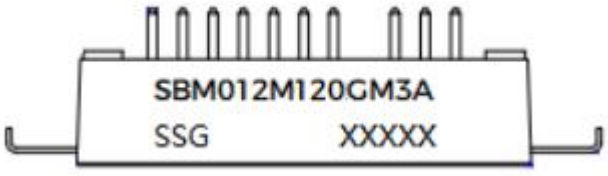


Where XXXXX is YYWWL

| | |
|---|---|
| SBM012M1202GM3A | = Part Name |
| SSG | = SSG |
| YY | = Year |
| WW | = Week |
| L | = Lot Number |

**Technical Data**
**Data Sheet N2944, Draft**

## Mechanical Dimensions GM

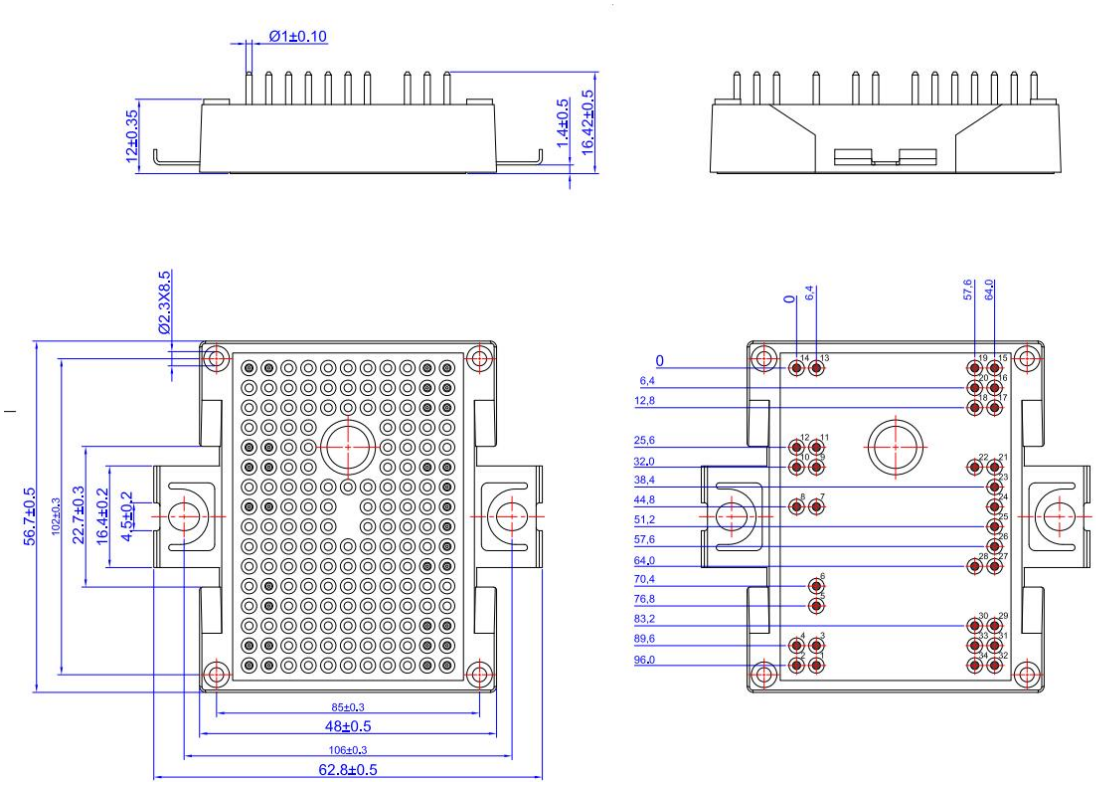

**Technical Data**
**Data Sheet N2944, Draft**

**DISCLAIMER:**
1- The information given herein, including the specifications and dimensions, is subject to change without prior notice to improve product characteristics. Before ordering, purchasers are advised to contact the SMC Diode Solutions sales department for the latest version of the datasheet(s).
2- In cases where extremely high reliability is required (such as use in nuclear power control, aerospace and aviation, traffic equipment, medical equipment , and safety equipment) , safety should be ensured by using semiconductor devices that feature assured safety or by means of users' fail-safe precautions or other arrangement .
3- In no event shall SMC Diode Solutions be liable for any damages that may result from an accident or any other cause during operation of the user's units according to the datasheet(s). SMC Diode Solution assumes no responsibility for any intellectual property claims or any other problems that may result from applications of information, products or circuits described in the datasheets.
4- In no event shall SMC Diode Solutions be liable for any failure in a semiconductor device or any secondary damage resulting from use at a value exceeding the absolute maximum rating.
5- No license is granted by the datasheet(s) under any patents or other rights of any third party or SMC Diode Solutions.
6- The datasheet(s) may not be reproduced or duplicated, in any form, in whole or part, without the expressed written permission of SMC Diode Solutions.
7- The products (technologies) described in the datasheet(s) are not to be provided to any party whose purpose in their application will hinder maintenance of international peace and safety nor are they to be applied to that purpose by their direct purchasers or any third party. When exporting these products (technologies), the necessary procedures are to be taken in accordance with related laws and regulations.